MAGNETRON - MB2659A-210GJ

Categories: Magnetrons



BILDERGALERIE

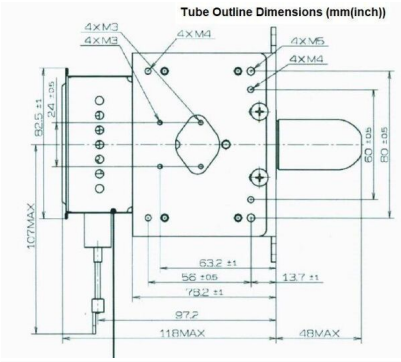

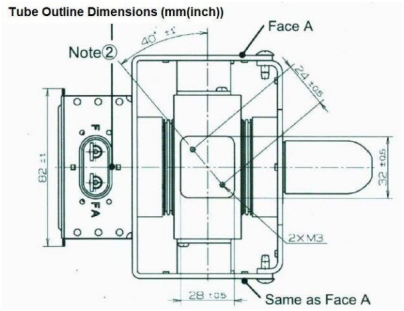

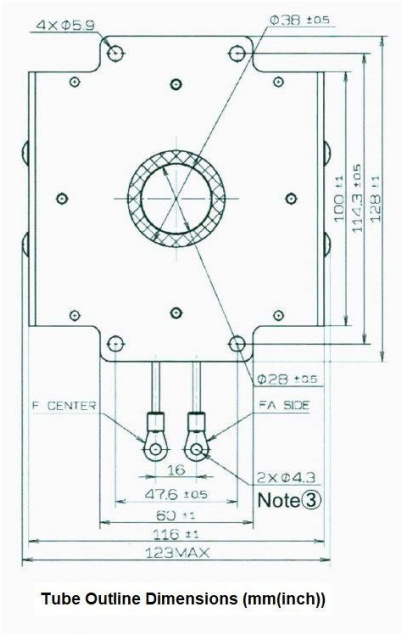

Tube Outline Dimensions (mm(inch))

Muegge GmbH
Hochstrasse 4-6
64385 Reichelsheim
Germany

T. +49 (0)6164-9307-0
F. +49 (0)6164-9307-93
E. info@muegge.de
www.muegge.de

ADDITIONAL INFORMATION

Typ	Magnetron
OEM Item Number	MB2659A-210GJ
Output Power CW [W]	3000
Frequency [MHz]	2450
ISM Band	S-Band
Cooling	water-cooled
Orientation of HV and cooling connectors	0°
Fastening / Studs	2x Through-hole Ø5,8 (no studs) / 2x M5 Bolt (Studs)
Orientation HV to fastening	0°
Magnet	Packaged magnet
Cooling Connector Type	G1/4" Male Thread
Temperature sensor	50 °C (122 °F)

Muegge GmbH
Hochstrasse 4-6
64385 Reichelsheim
Germany

T. +49 (0)6164-9307-0
F. +49 (0)6164-9307-93
E. info@muegge.de
www.muegge.de