MAGNETRON - 1200007

Category: Magnetrons



BILDERGALERIE

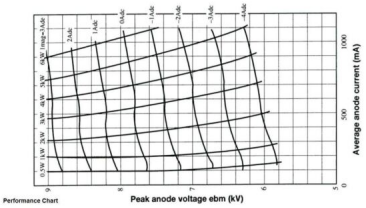

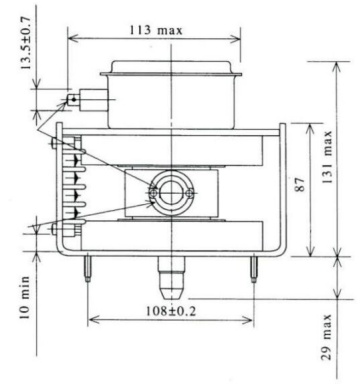

Tube Outline Dimensions (mm(inch))

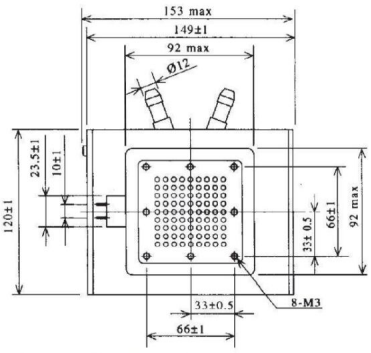

Tube Outline Dimensions (mm(inch))

Muegge GmbH
Hochstrasse 4-6
64385 Reichelsheim
Germany

T. +49 (0)6164-9307-0
F. +49 (0)6164-9307-93
E. info@muegge.de
www.muegge.de

ADDITIONAL INFORMATION

Typ	Magnetron
OEM Item Number	E3327
Output Power CW [W]	6000
Frequency [MHz]	2450
ISM Band	S-Band
Cooling	water-cooled
Orientation of HV and cooling connectors	90°
Fastening / Studs	2x M5 Bolt (Studs)
Orientation HV to fastening	90°
Magnet	E-Magnet + Packaged magnet
Cooling Connector Type	Hose Nipple Ø12 mm
Temperature sensor	50 °C (122 °F)
Equivalent to	YJ1600

Muegge GmbH
Hochstrasse 4-6
64385 Reichelsheim
Germany

T. +49 (0)6164-9307-0
F. +49 (0)6164-9307-93
E. info@muegge.de
www.muegge.de