MAGNETRON - 1200219

Category: Magnetrons



BILDERGALERIE

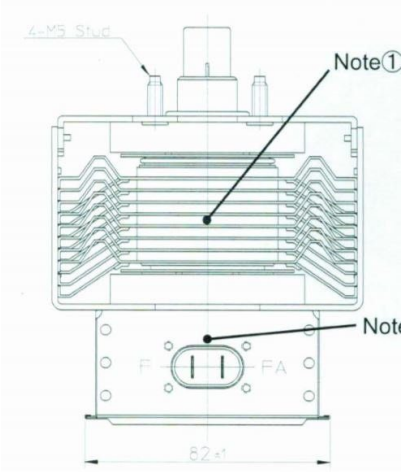

Tube Outline Dimensions (mm(inch))

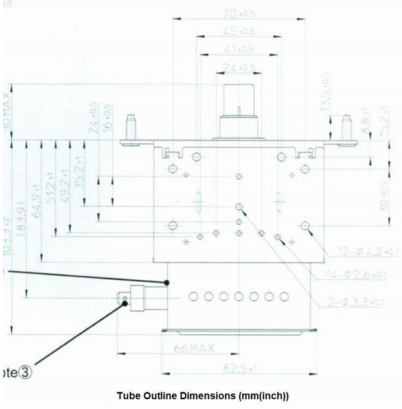

Tube Outline Dimensions (mm(inch))

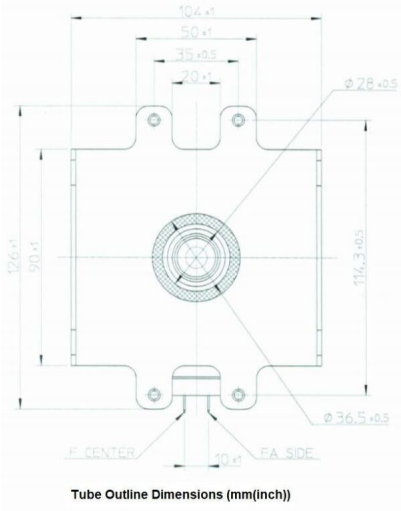

Tube Outline Dimensions (mm(inch))

Muegge GmbH
Hochstrasse 4-6
64385 Reichelsheim
Germany

T. +49 (0)6164-9307-0
F. +49 (0)6164-9307-93
E. info@muegge.de
www.muegge.de

ADDITIONAL INFORMATION

Typ	Magnetron
OEM Item Number	2M262A-08BMG
Output Power CW [W]	1500
Frequency [MHz]	2450
ISM Band	S-Band
Cooling	air-cooled
Orientation of HV and cooling connectors	0°
Fastening / Studs	2x M5 Bolt (Studs)
Orientation HV to fastening	0°
Magnet	Packaged magnet
Cooling Connector Type	–
Temperature sensor	–

Muegge GmbH
Hochstrasse 4-6
64385 Reichelsheim
Germany

T. +49 (0)6164-9307-0
F. +49 (0)6164-9307-93
E. info@muegge.de
www.muegge.de