MAGNETRON-HEAD - MH1000B-250BH

Category: Microwave generators



BILDERGALERIE

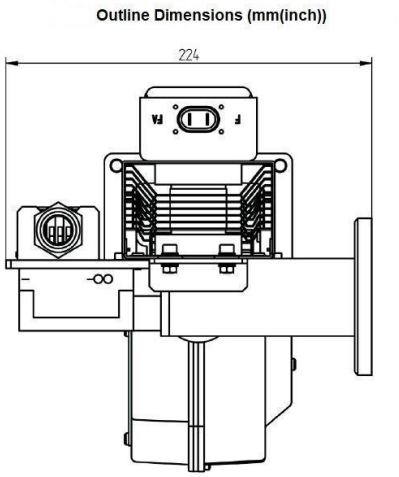

Muegge GmbH
Hochstrasse 4-6
64385 Reichelsheim
Germany

T. +49 (0)6164-9307-0
F. +49 (0)6164-9307-93
E. info@muegge.de
www.muegge.de

ADDITIONAL INFORMATION

Typ	Magnetron Head
Frequency [MHz]	2450
Output Power CW [W]	1000
Line connection	1~ (L / N / PE)
Mains voltage control circuit [V]	–
Line Frequency [Hz]	–
Cooling	air
Pulse output power max [W]	–
Front-Panel (HMI)	–
Width [mm (inch)]	325 (12,80)
Height [mm (inch)]	235 (9,25)
Depth [mm (inch)]	235 (9,25)
Protection Class	IP00
Output Connection Type	WR340 / R26
Output Connection	Waveguide
Isolator	No

Muegge GmbH
Hochstrasse 4-6
64385 Reichelsheim
Germany

T. +49 (0)6164-9307-0
F. +49 (0)6164-9307-93
E. info@muegge.de
www.muegge.de