MAGNETRON-HEAD - MH3000S-250BF

Category: Microwave generators



BILDERGALERIE

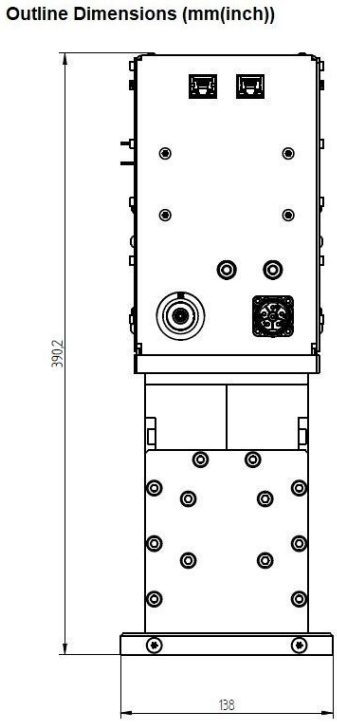

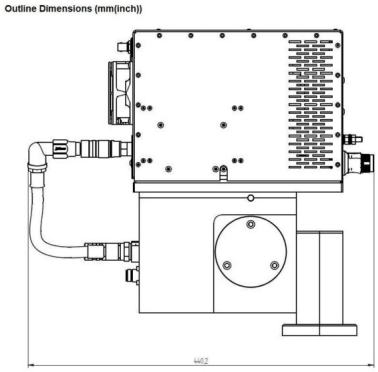

Muegge GmbH
Hochstrasse 4-6
64385 Reichelsheim
Germany

T. +49 (0)6164-9307-0
F. +49 (0)6164-9307-93
E. info@muegge.de
www.muegge.de

ADDITIONAL INFORMATION

Typ	Magnetron Head
Frequency [MHz]	2450
Output Power CW [W]	3000
Line connection	1~ (L / N / PE)
Mains voltage control circuit [V]	24
Line Frequency [Hz]	DC
Cooling	Air / Water, Air / Water
Pulse output power max [W]	6000
Front-Panel (HMI)	With Connectors
Width [mm (inch)]	138 (5,43)
Height [mm (inch)]	390 (15,35)
Depth [mm (inch)]	524 (20,63)
Protection Class	IP20
Output Connection Type	WR340 / R26
Output Connection	Waveguide
Isolator	yes

Muegge GmbH
Hochstrasse 4-6
64385 Reichelsheim
Germany

T. +49 (0)6164-9307-0
F. +49 (0)6164-9307-93
E. info@muegge.de
www.muegge.de