MAGNETRON - MB2532A-140ET

Category: Magnetrons



BILDERGALERIE

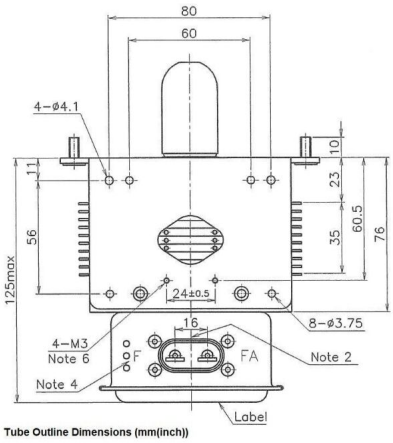

Tube Outline Dimensions (mm(inch))

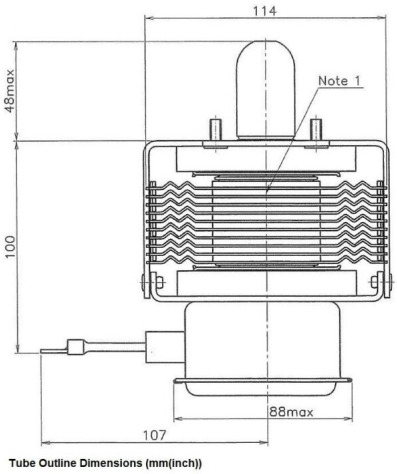

Tube Outline Dimensions (mm(inch))

Muegge GmbH
Hochstrasse 4-6
64385 Reichelsheim
Germany

T. +49 (0)6164-9307-0
F. +49 (0)6164-9307-93
E. info@muegge.de
www.muegge.de

ADDITIONAL INFORMATION

Typ	Magnetron
OEM Item Number	
Output Power CW [W]	
Frequency [MHz]	2455
ISM Band	S-Band
Cooling	water-cooled
Orientation of HV and cooling connectors	90°
Fastening / Studs	2x M5 Bolt (Studs)
Orientation HV to fastening	90°
Magnet	Packaged magnet
Cooling Connector Type	G3/8" Female Thread
Temperature sensor	–

Muegge GmbH
Hochstrasse 4-6
64385 Reichelsheim
Germany

T. +49 (0)6164-9307-0
F. +49 (0)6164-9307-93
E. info@muegge.de
www.muegge.de